90° hybrid

omega = 2 * 3.14159 * 100e6

Z0 = 50

L = Z0/omega

C = 1/(Z0*omega)

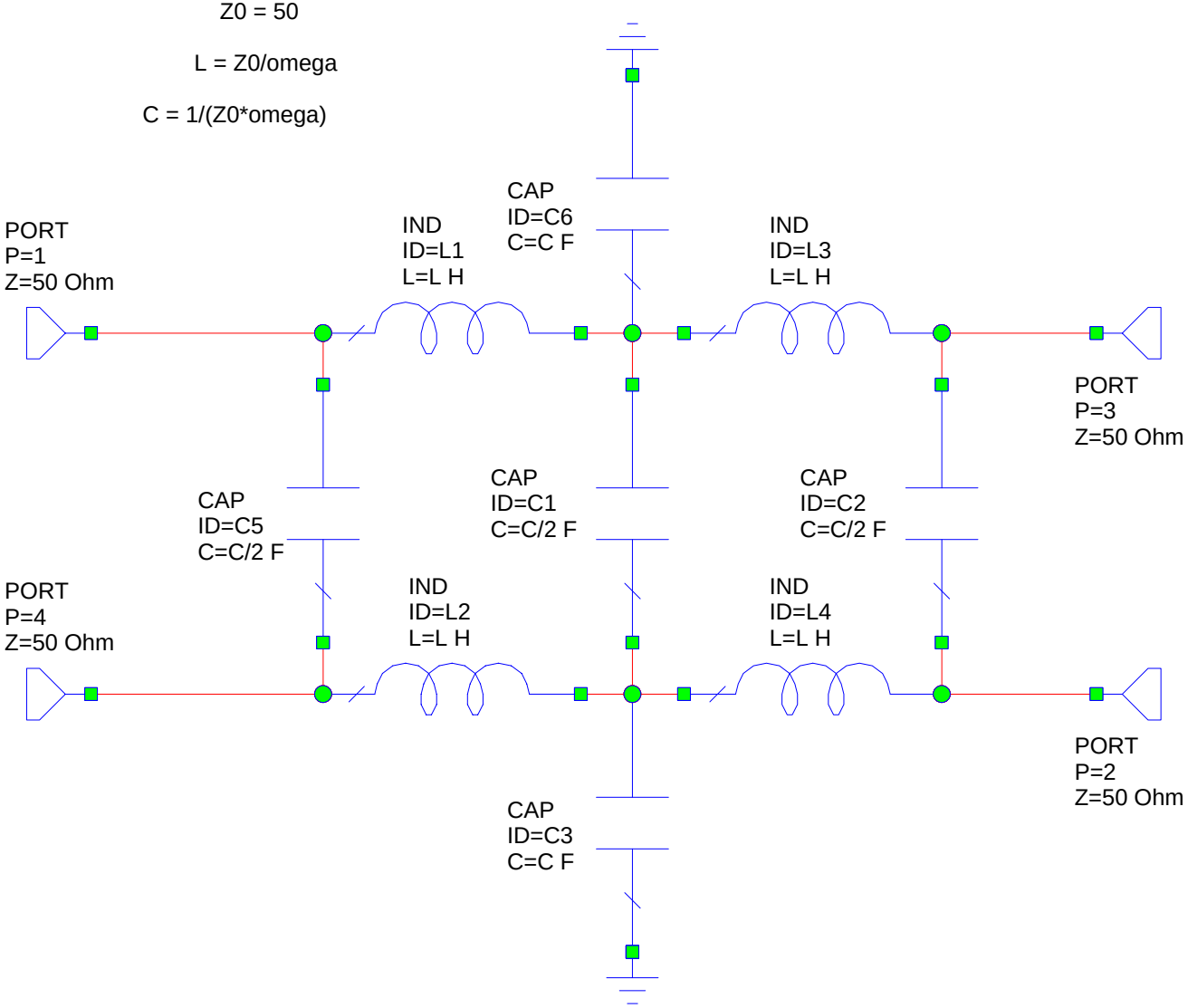

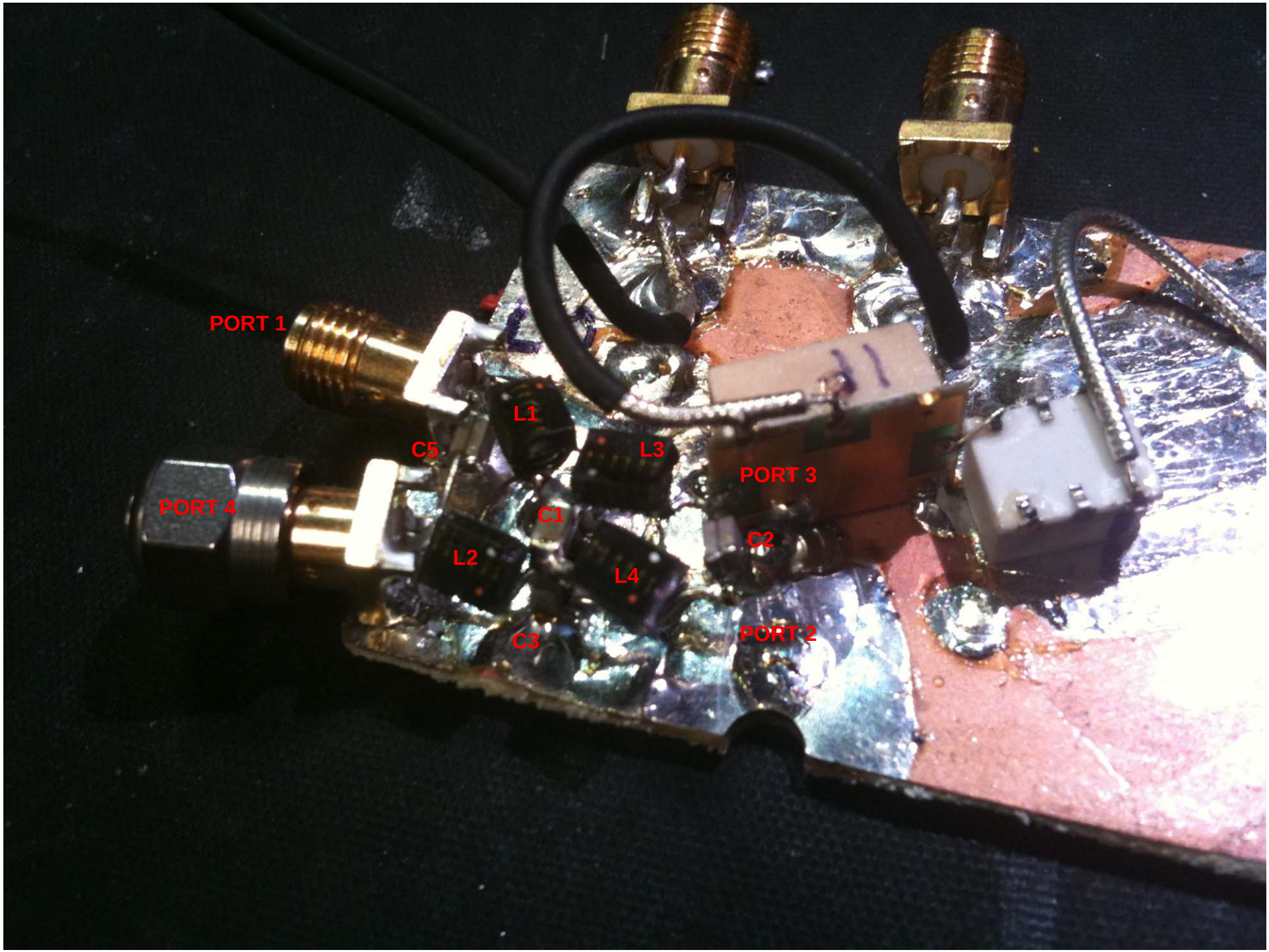
PORT 1
L1
C5
L3
PORT 3
PORT 4
C1
C2
L2
L4
C3
PORT 2

Resistive power divider

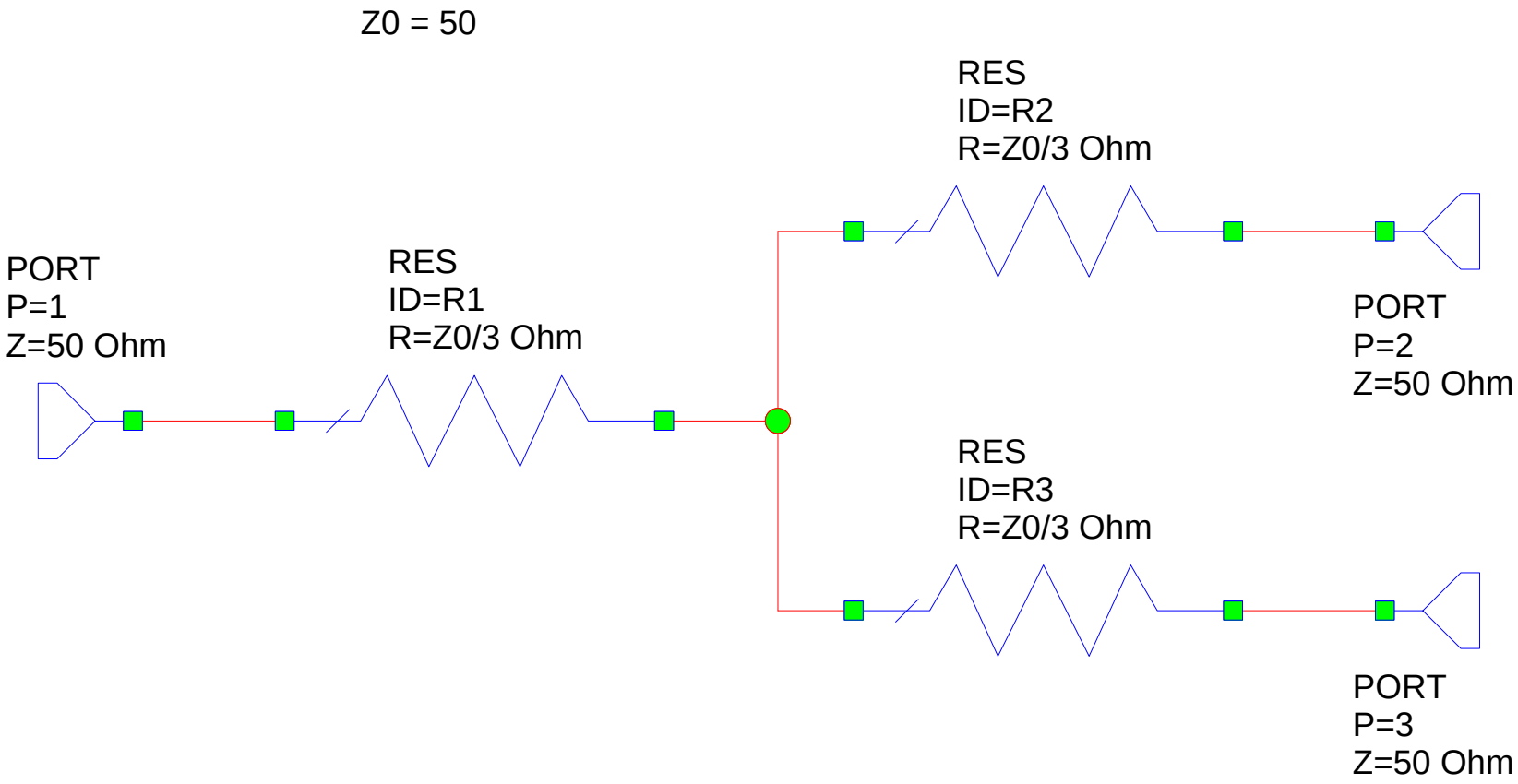

Lumped element Wilkinson power divider

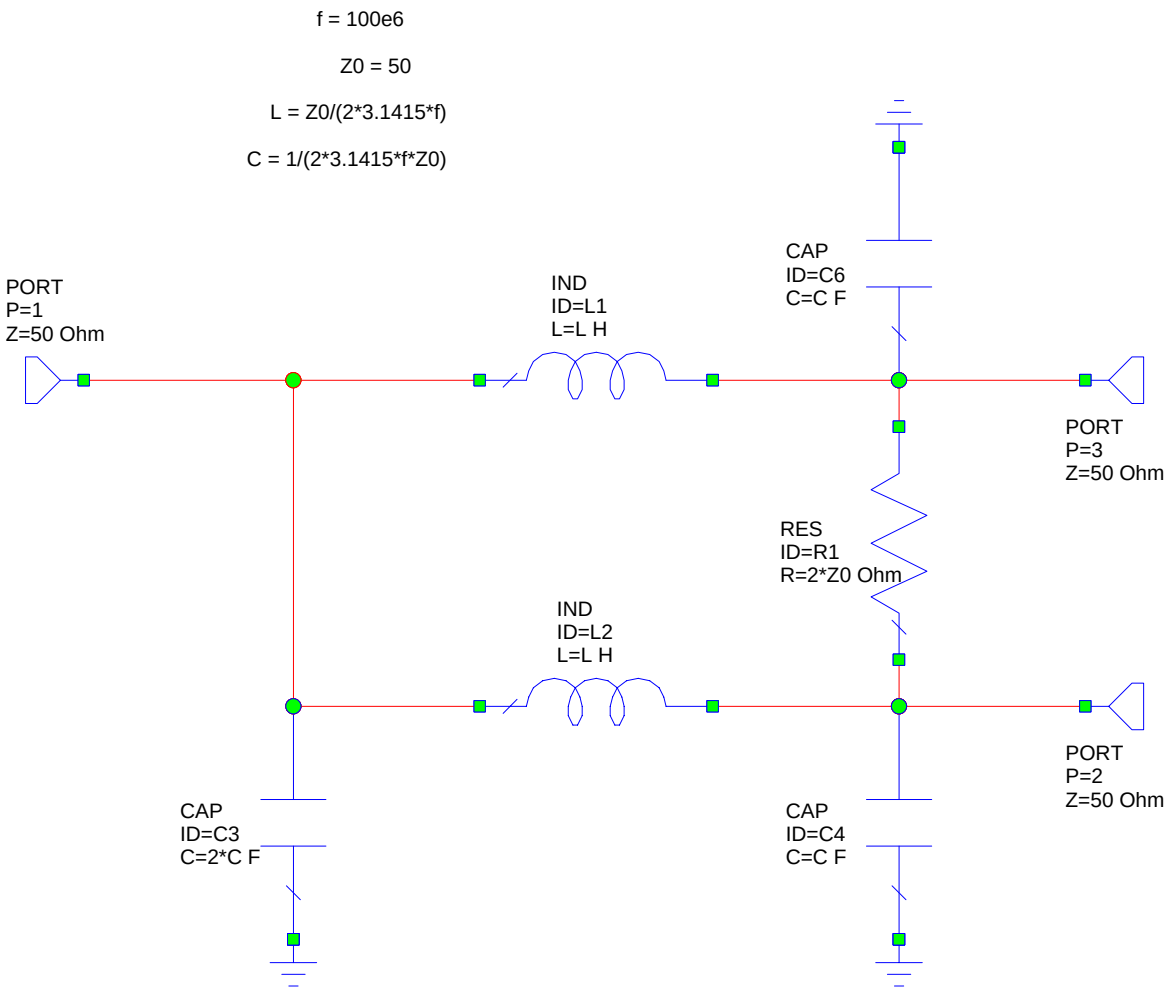

Low pass filter
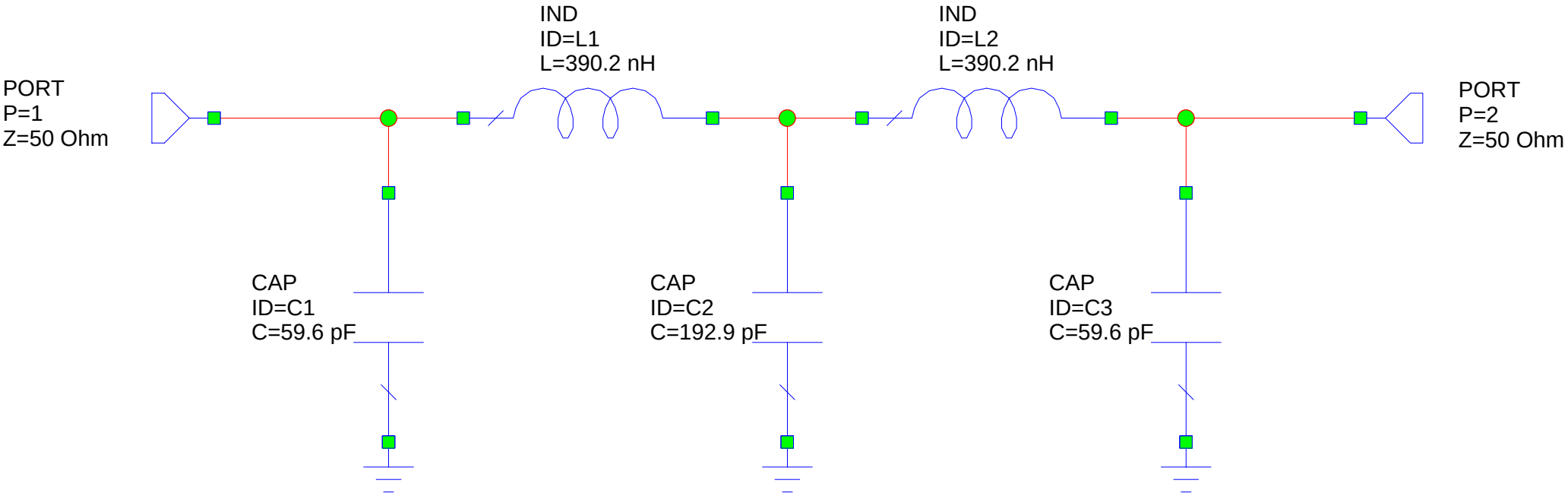
5th order Butterworth, fc = 33MHz