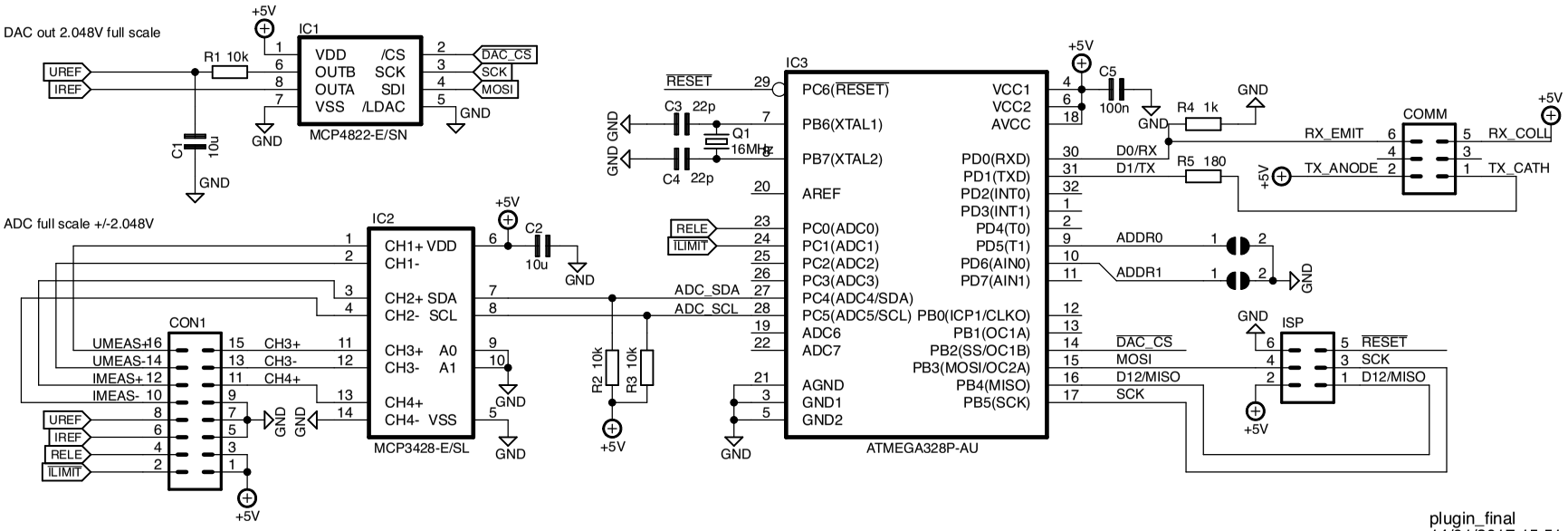

plugin_final
14/01/2017 15:51